Round 1 - Thursday, July 11th, 2019

SHOTLINK

John Deere Classic

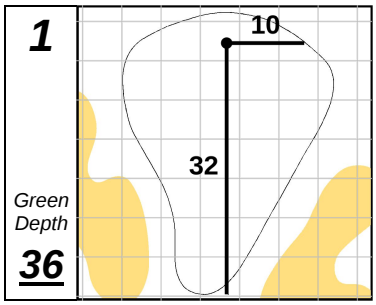

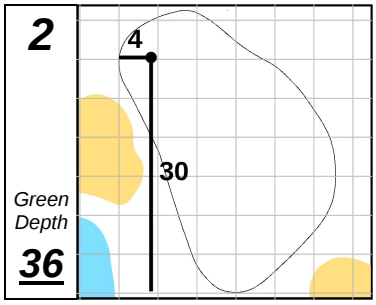

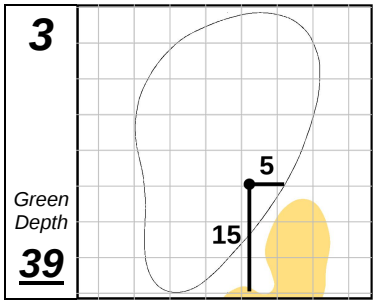

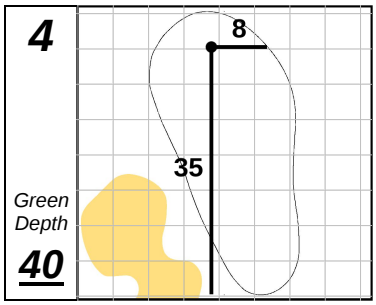

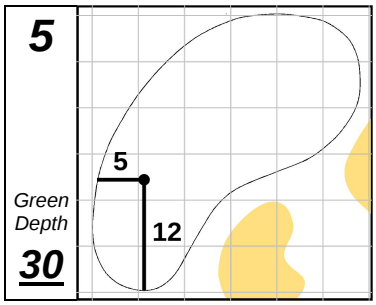

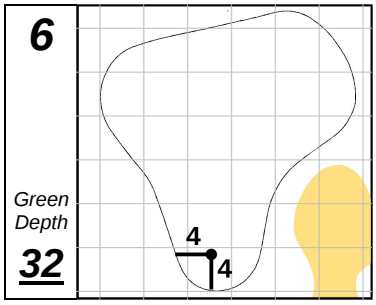

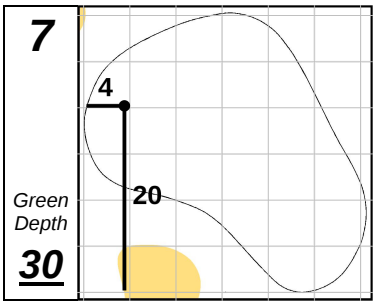

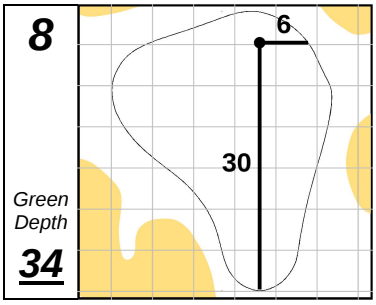

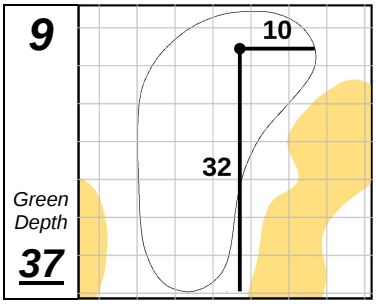

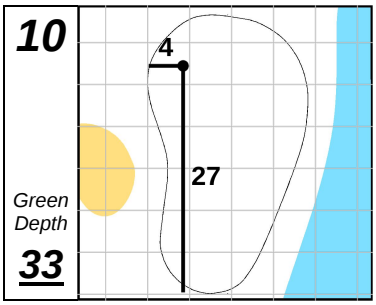

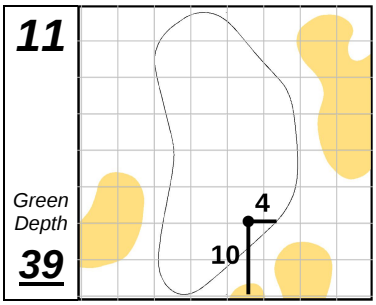

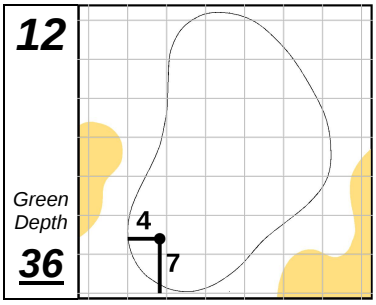

TPC Deere Run

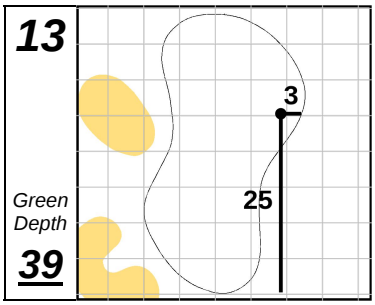

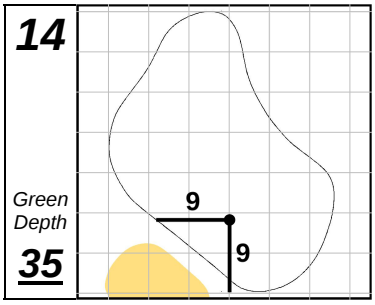

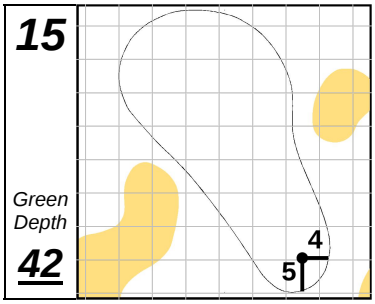

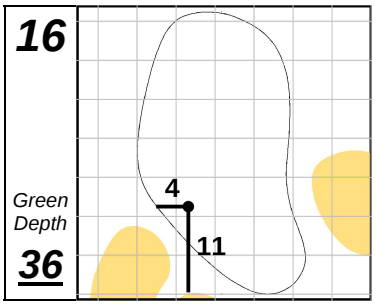

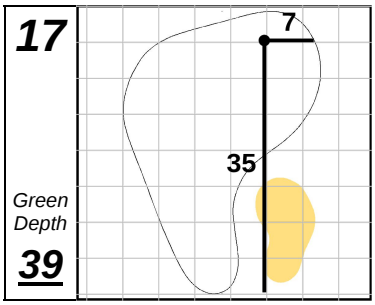

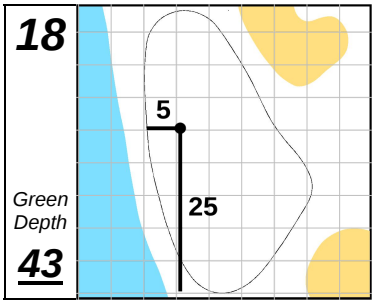

Each side of a complete square on the green represents 5 YARDS.

Wednesday, July 10, 2019 9:29 AM