Round 1 - Thursday, August 22nd, 2019

SHOTLINK

TOUR Championship

1
Green Depth **36**

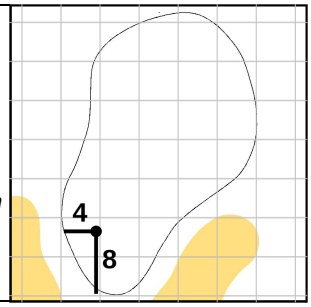

2
Green Depth **38**

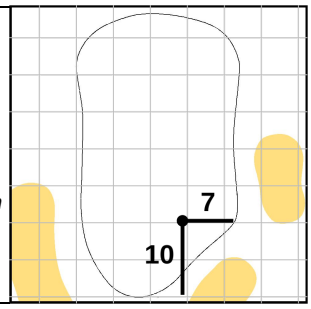

3
Green Depth **26**

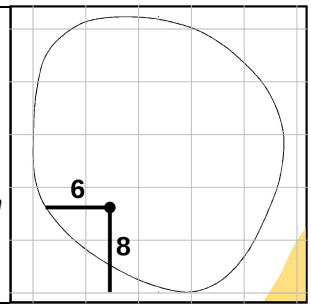

4
Green Depth **27**

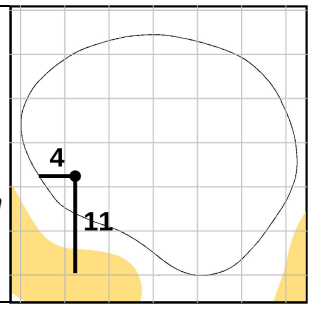

5
Green Depth **36**

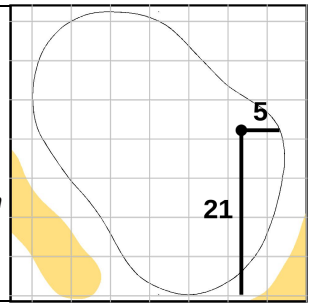

6
Green Depth **37**

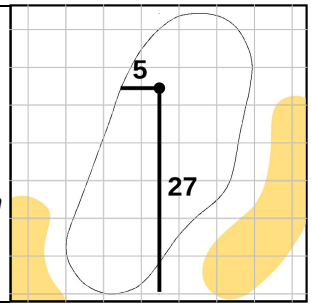

7
Green Depth **35**

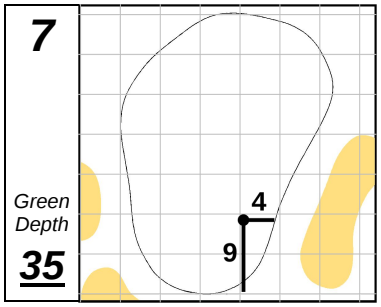

8
Green Depth **28**

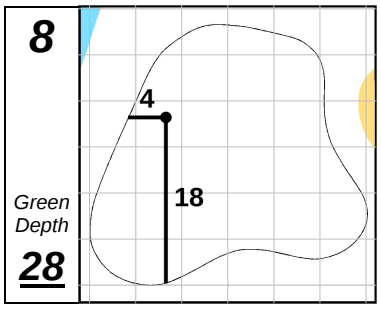

9
Green Depth **31**

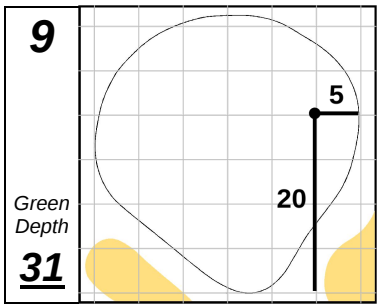

10
Green Depth **34**

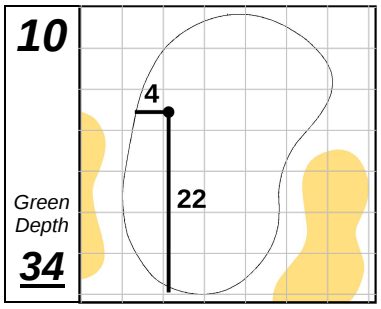

11
Green Depth **32**

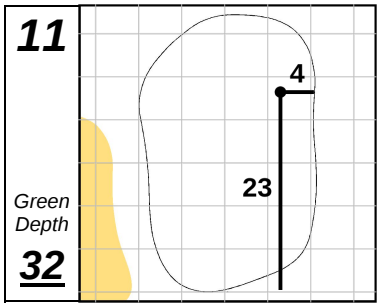

12
Green Depth **36**

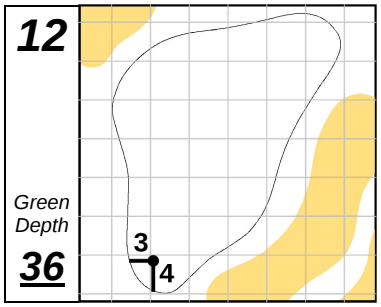

East Lake Golf Club

13
Green Depth **34**

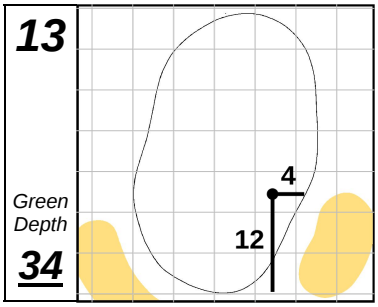

14
Green Depth **39**

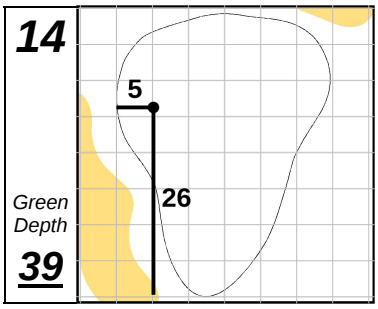

15
Green Depth **32**

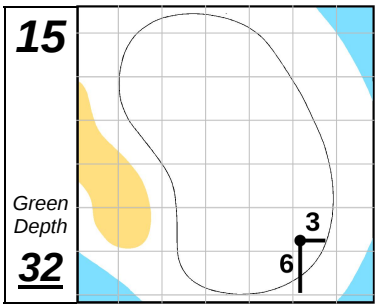

16
Green Depth **29**

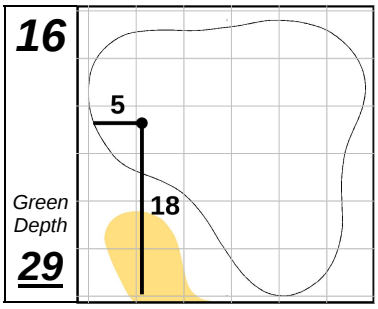

17
Green Depth **24**

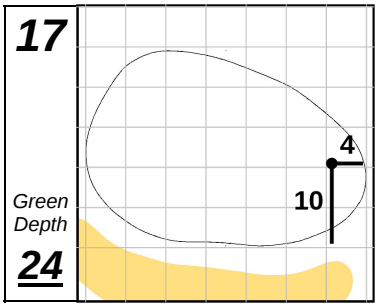

18
Green Depth **31**

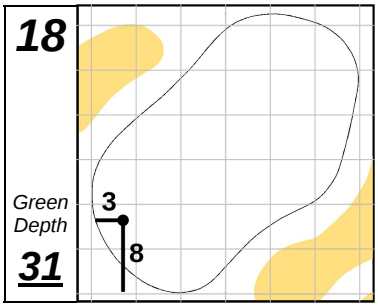

Each side of a complete square on the green represents 5 YARDS.

Wednesday, August 21, 2019 10:01 AM