Round 2 - Friday, August 23rd, 2019

SHOTLINK

TOUR Championship

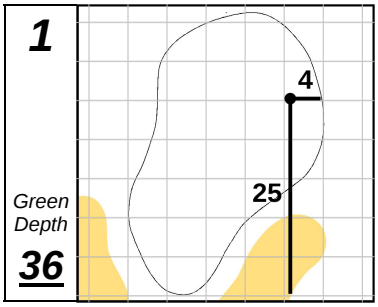

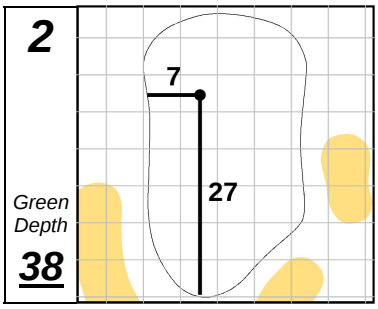

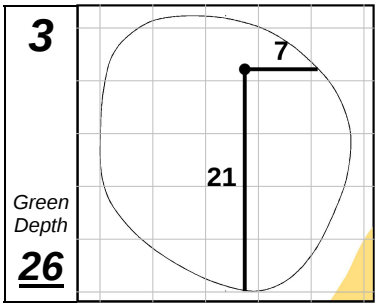

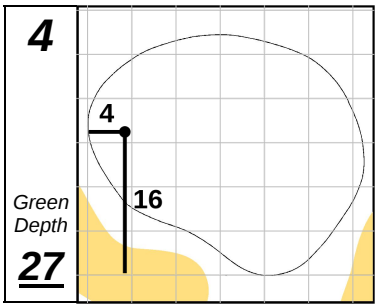

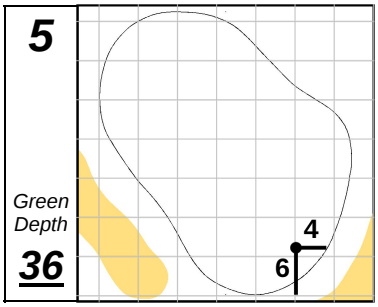

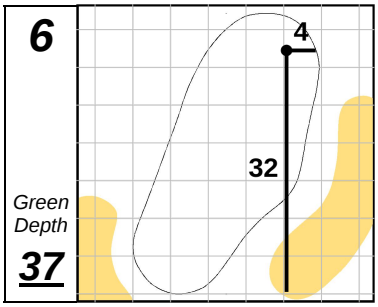

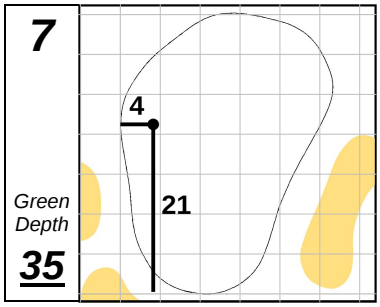

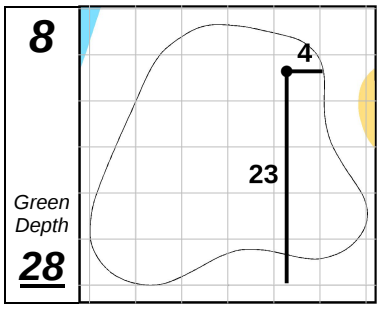

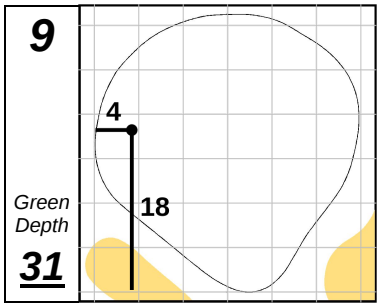

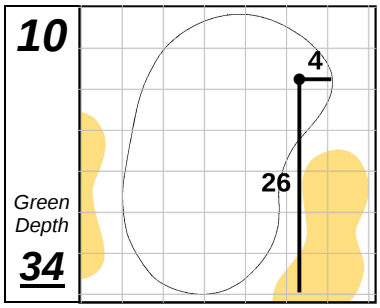

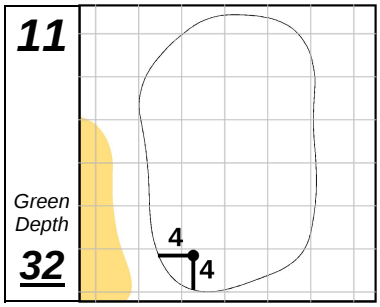

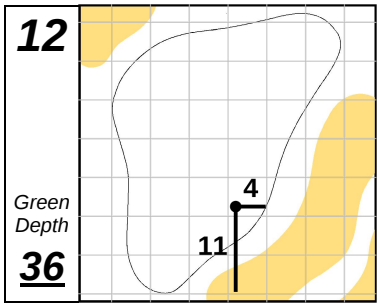

East Lake Golf Club

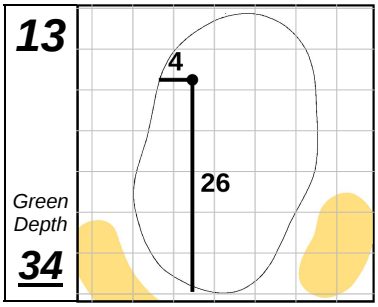

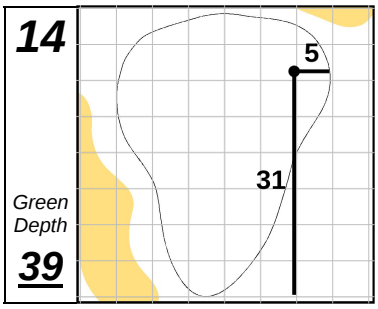

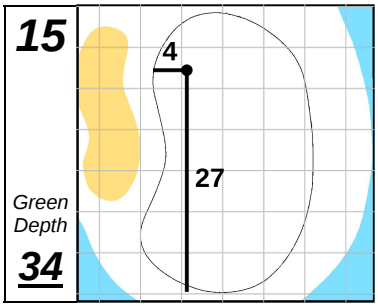

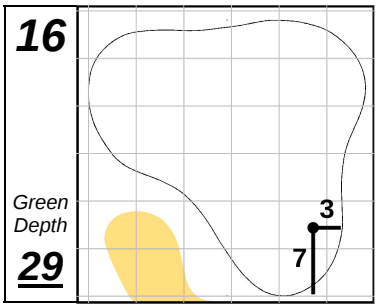

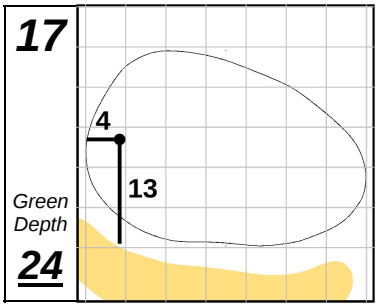

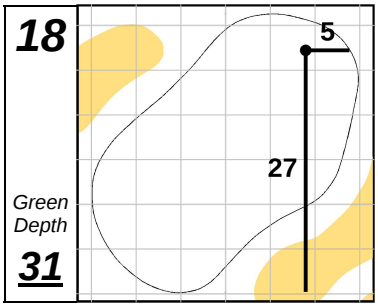

Each side of a complete square on the green represents 5 YARDS.

Thursday, August 22, 2019 12:39 PM