Round 2 - Friday, September 13th, 2019

SHOTLINK

A Military Tribute at The Greenbrier

1
Green Depth **31**

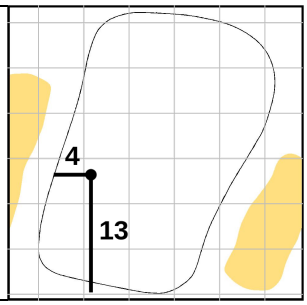

2
Green Depth **36**

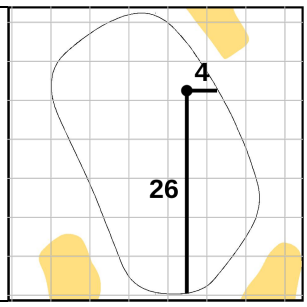

3
Green Depth **59**

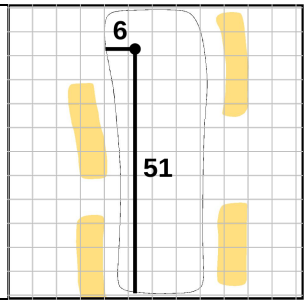

4
Green Depth **32**

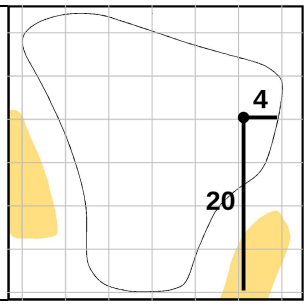

5
Green Depth **29**

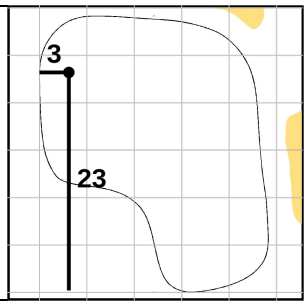

6
Green Depth **35**

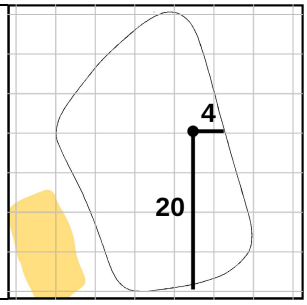

7
Green Depth **36**

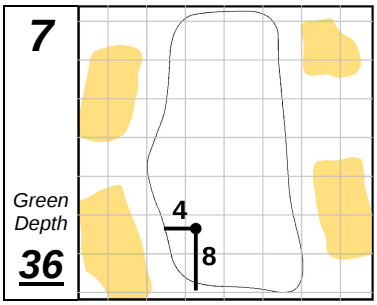

8
Green Depth **37**

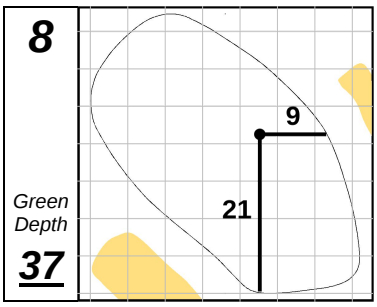

9
Green Depth **36**

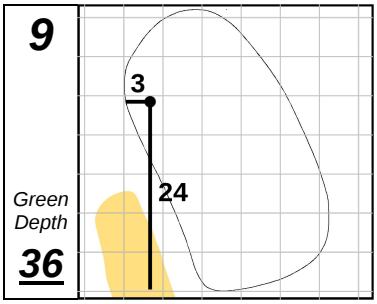

10
Green Depth **34**

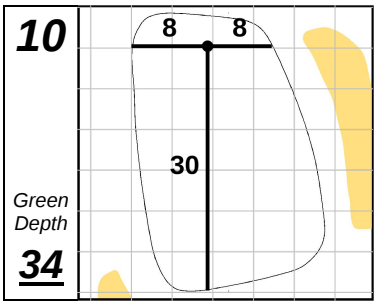

11
Green Depth **31**

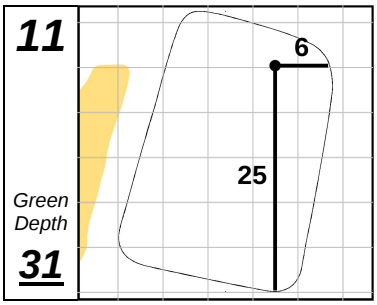

12
Green Depth **34**

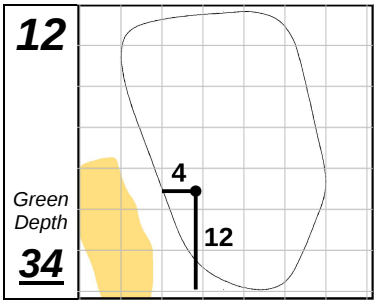

The Old White TPC

13
Green Depth **31**

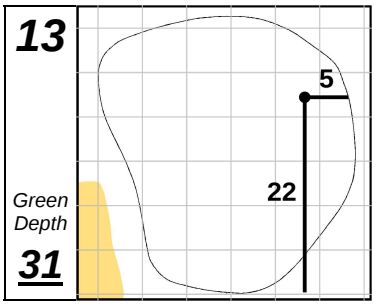

14
Green Depth **31**

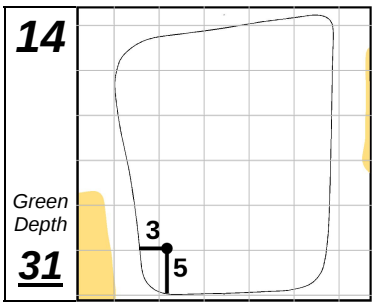

15
Green Depth **30**

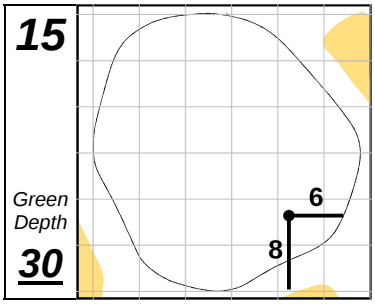

16
Green Depth **32**

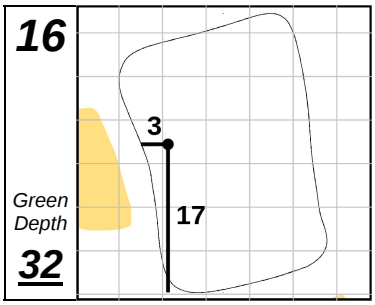

17
Green Depth **30**

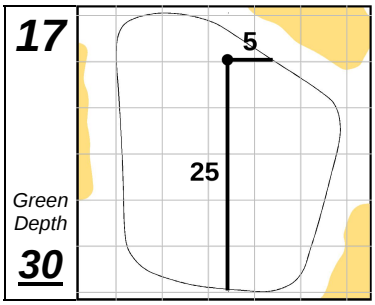

18
Green Depth **31**

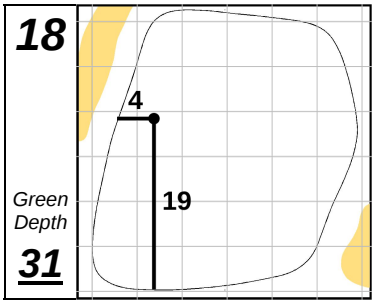

Each side of a complete square on the green represents 5 YARDS.

Thursday, September 12, 2019 10:16 AM