Round 2 - Friday, September 20th, 2019

SHOTLINK

Sanderson Farms Championship

1
Green Depth **34**

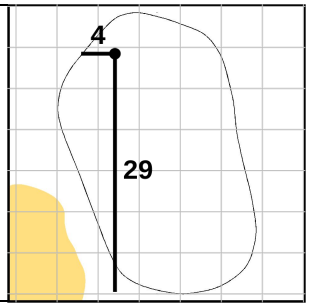

2
Green Depth **35**

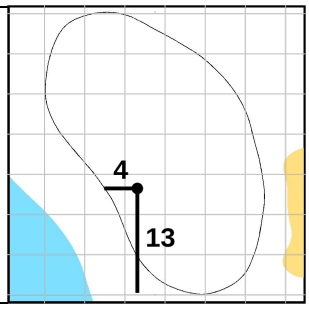

3
Green Depth **25**

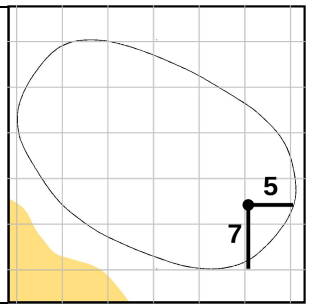

4
Green Depth **32**

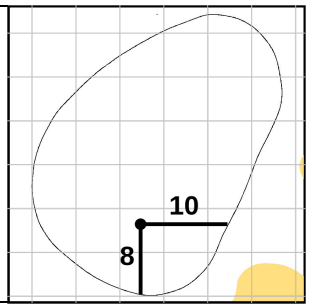

5
Green Depth **23**

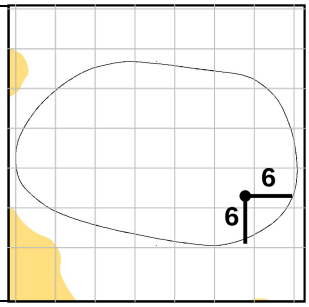

6
Green Depth **38**

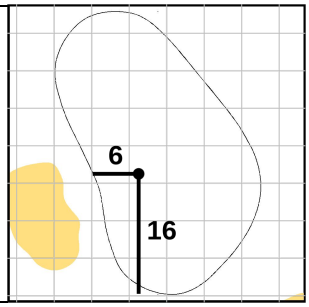

7
Green Depth **33**

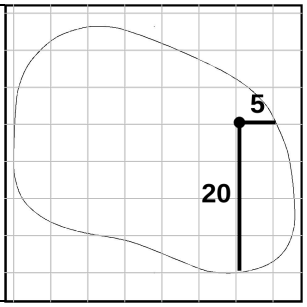

8
Green Depth **28**

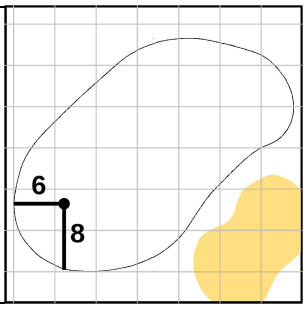

9
Green Depth **24**

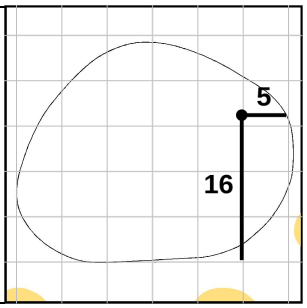

10
Green Depth **38**

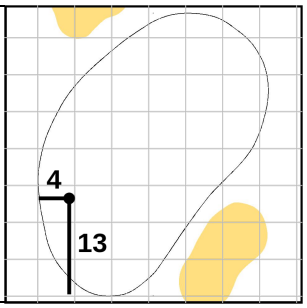

11
Green Depth **38**

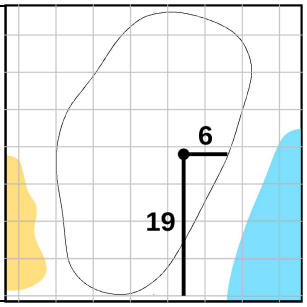

12
Green Depth **27**

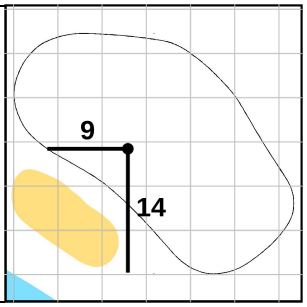

Country Club of Jackson

13
Green Depth **31**

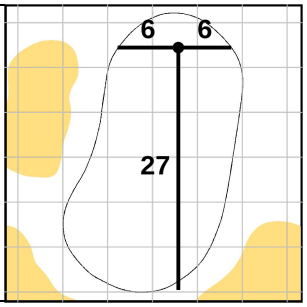

14
Green Depth **30**

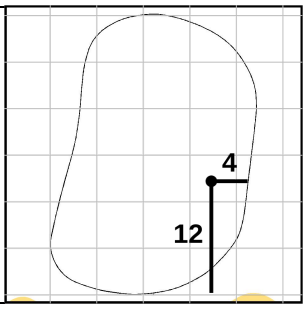

15
Green Depth **29**

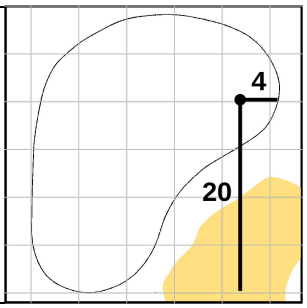

16
Green Depth **34**

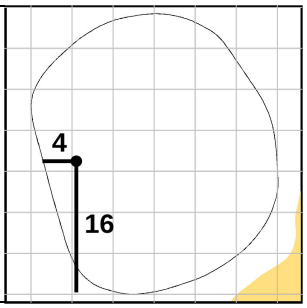

17
Green Depth **37**

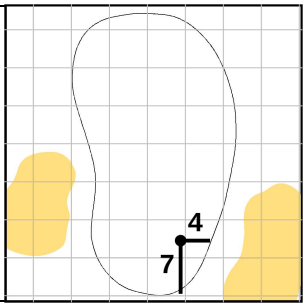

18
Green Depth **35**

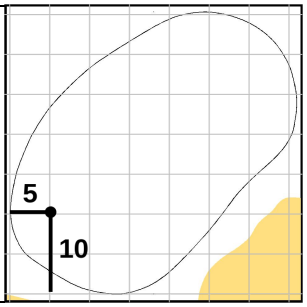

Each side of a complete square on the green represents 5 YARDS.

Thursday, September 19, 2019 9:15 AM