Thursday, June 27, 2024

SHOTLINK

Memorial Health Championship presented by LRS

Panther Creek Country Club

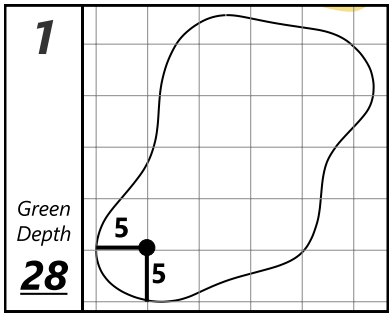

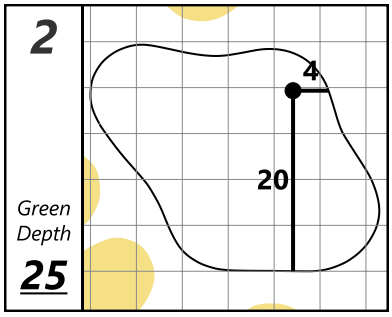

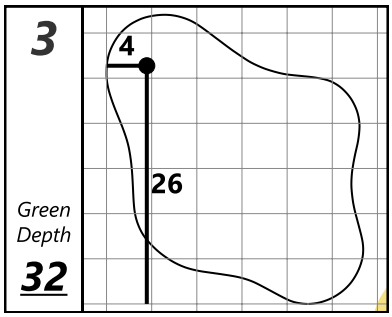

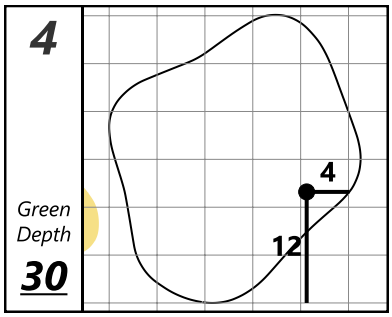

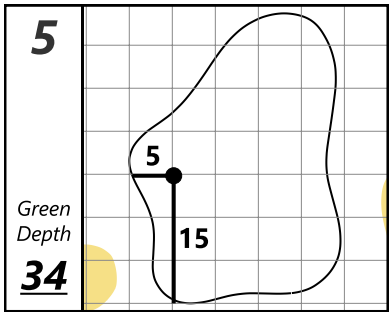

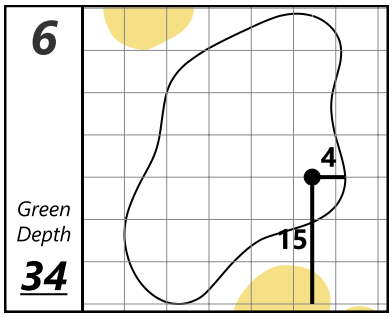

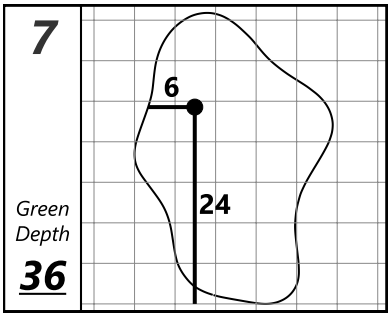

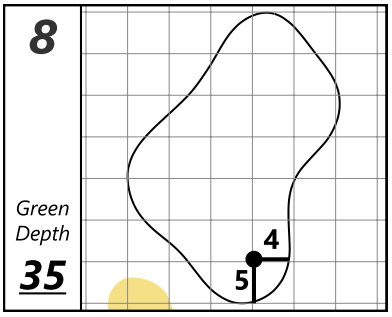

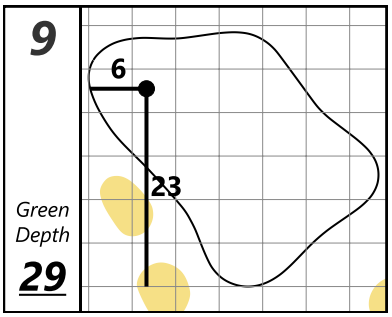

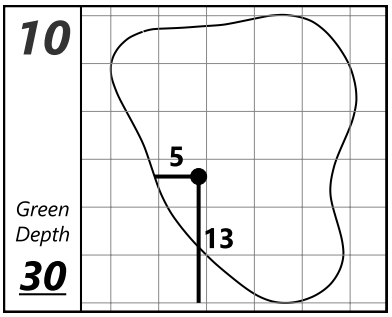

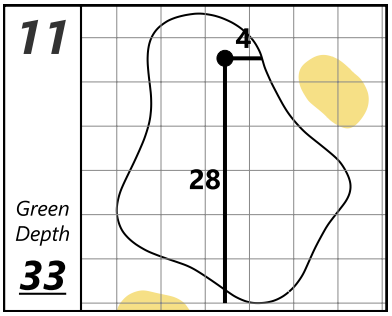

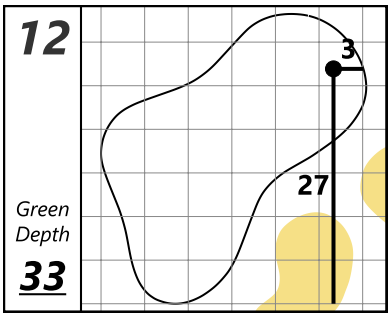

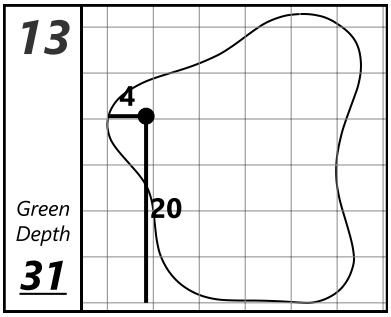

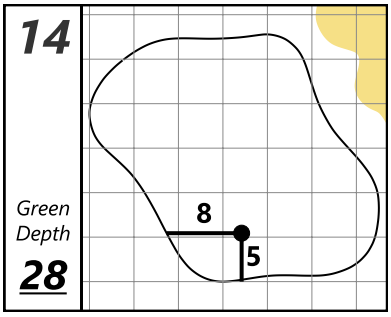

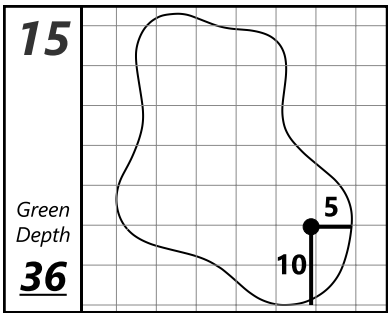

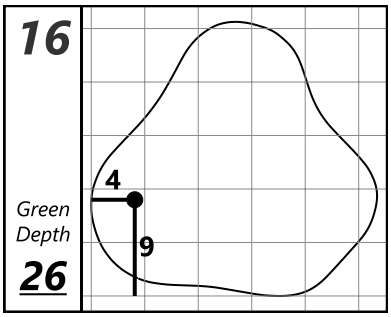

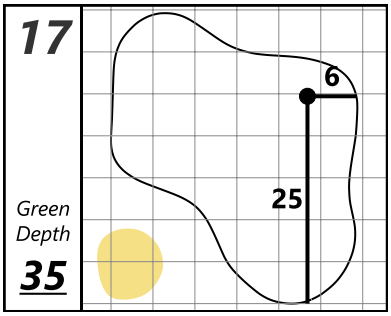

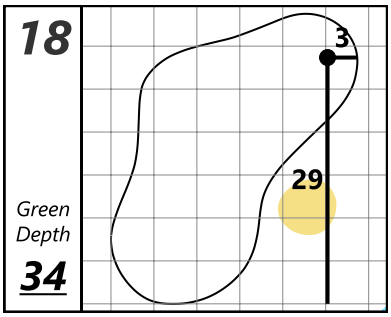

Each side of a complete square on the green represents 5 YARDS

Wednesday, June 26, 2024 8:31 AM