Round 3- Saturday, September 13, 2025

SHOTLINK

Simmons Bank Open for the Snedeker Foundation

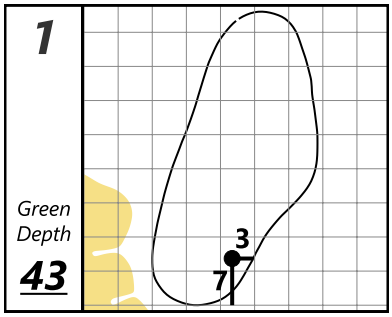

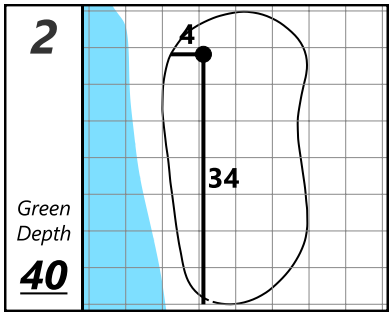

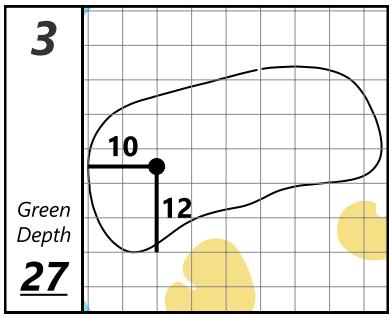

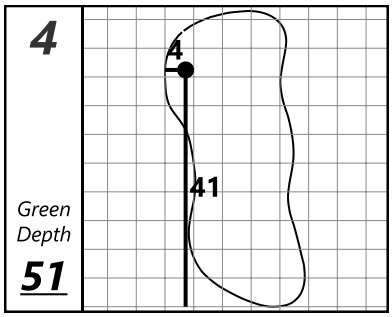

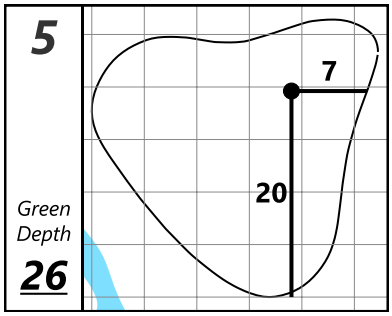

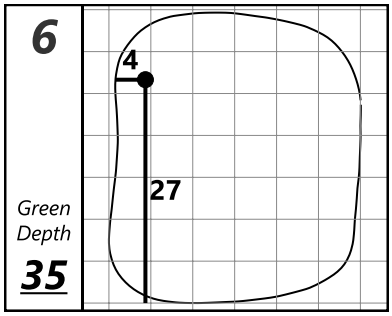

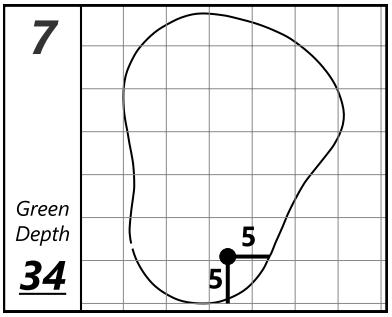

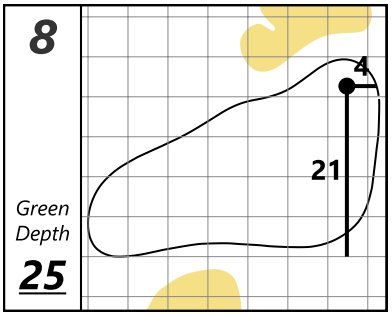

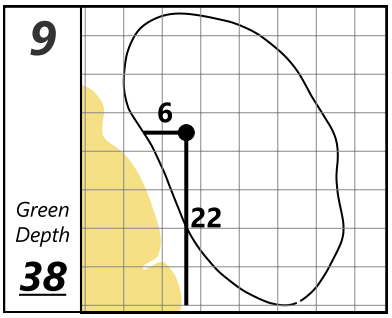

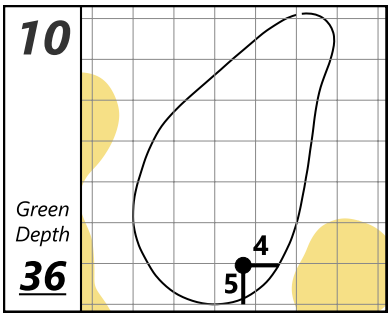

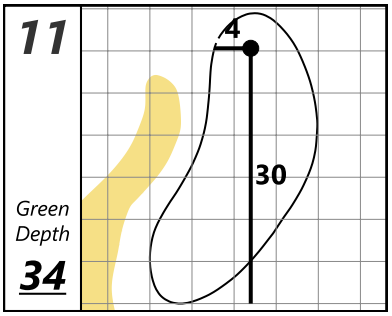

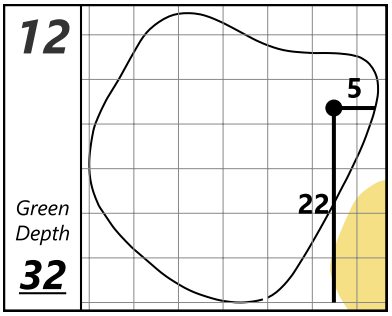

Vanderbilt Legends Club

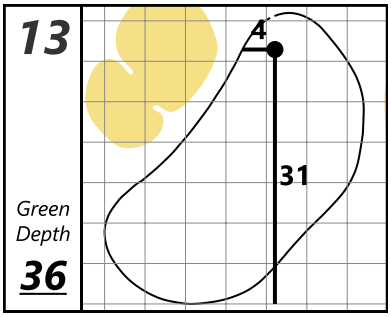

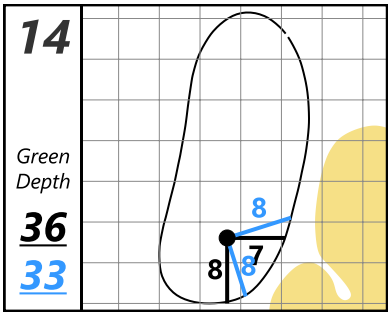

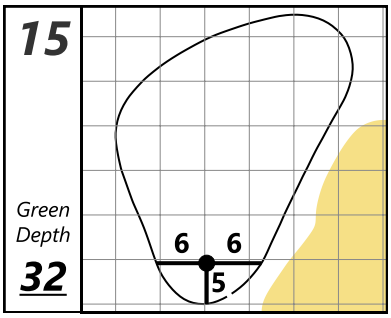

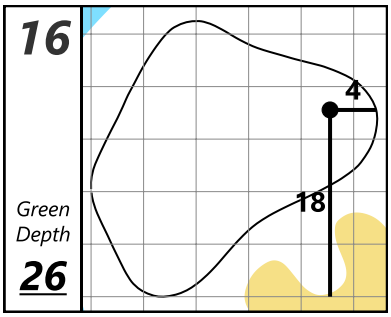

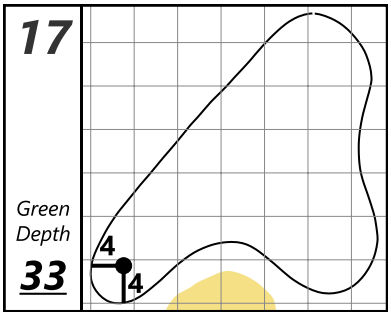

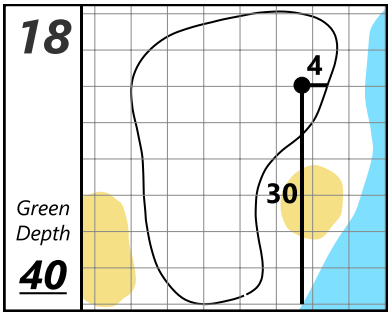

Each side of a complete square on the green represents 5 YARDS

Friday, September 12, 2025 9:14 AM