Round 4, Sunday, November 23, 2025

SHOTLINK

The RSM Classic

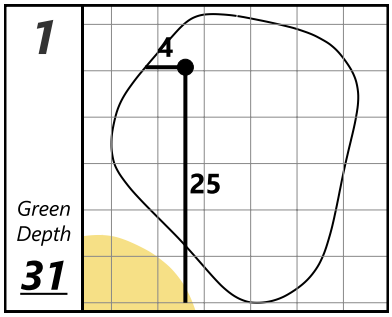

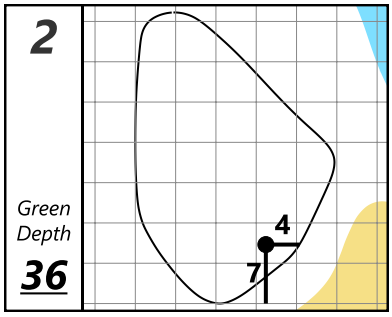

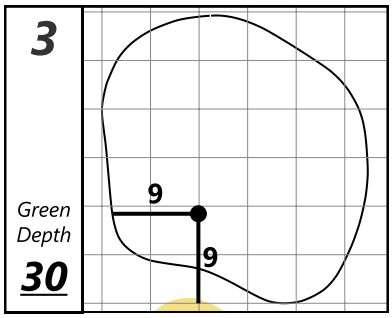

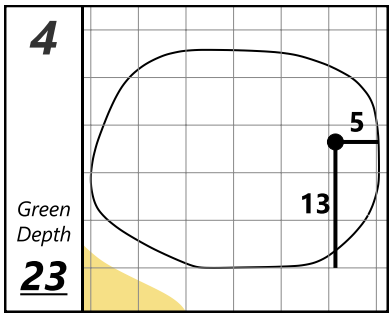

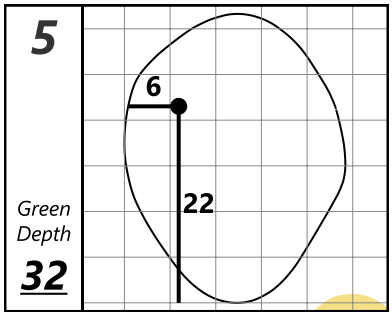

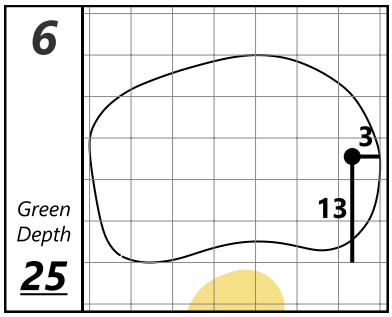

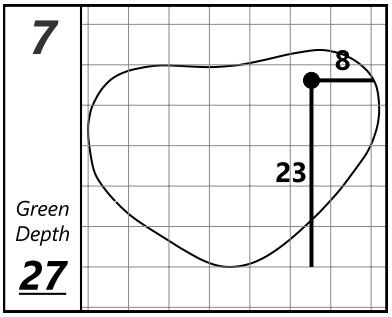

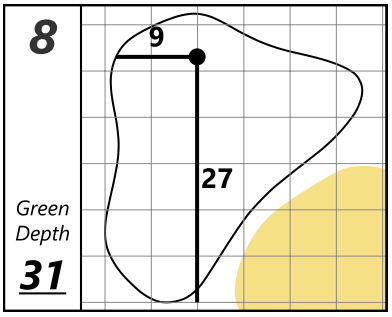

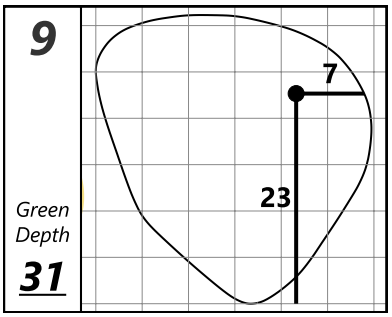

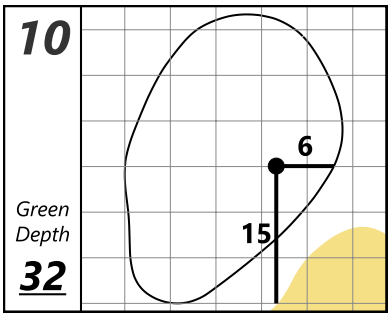

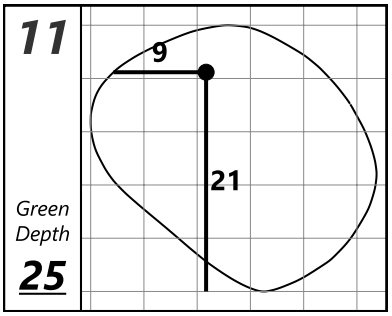

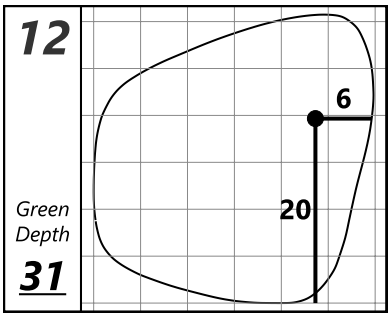

Sea Island Golf Club (Seaside Course)

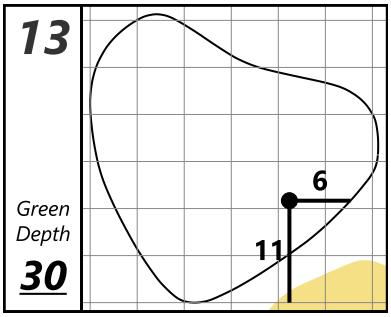

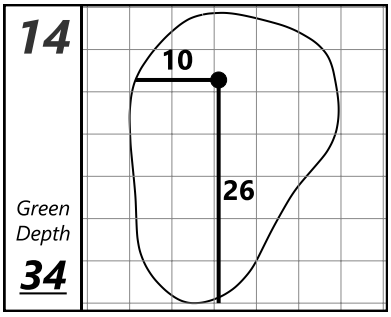

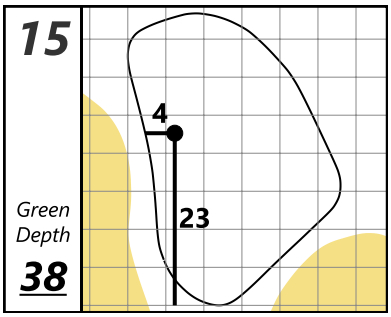

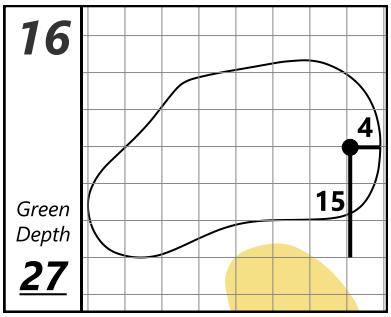

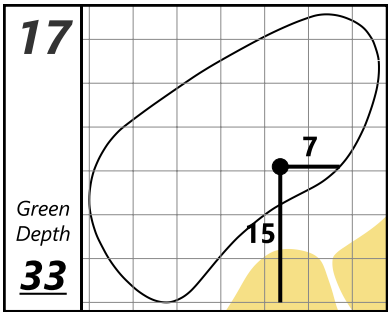

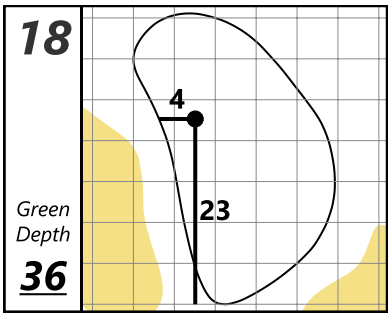

Each side of a complete square on the green represents 5 YARDS

Saturday, November 22, 2025 12:32 PM